SYSTEM WIRING DIAGRAMS
Headlight Circuit, W/O DRL
1997 Ford Probe

For DIAKOM-AUTO http://www.diakom.ru Taganrog support@diakom.ru (8634)315187

Copyright © 1998 Mitchell Repair Information Company, LLC
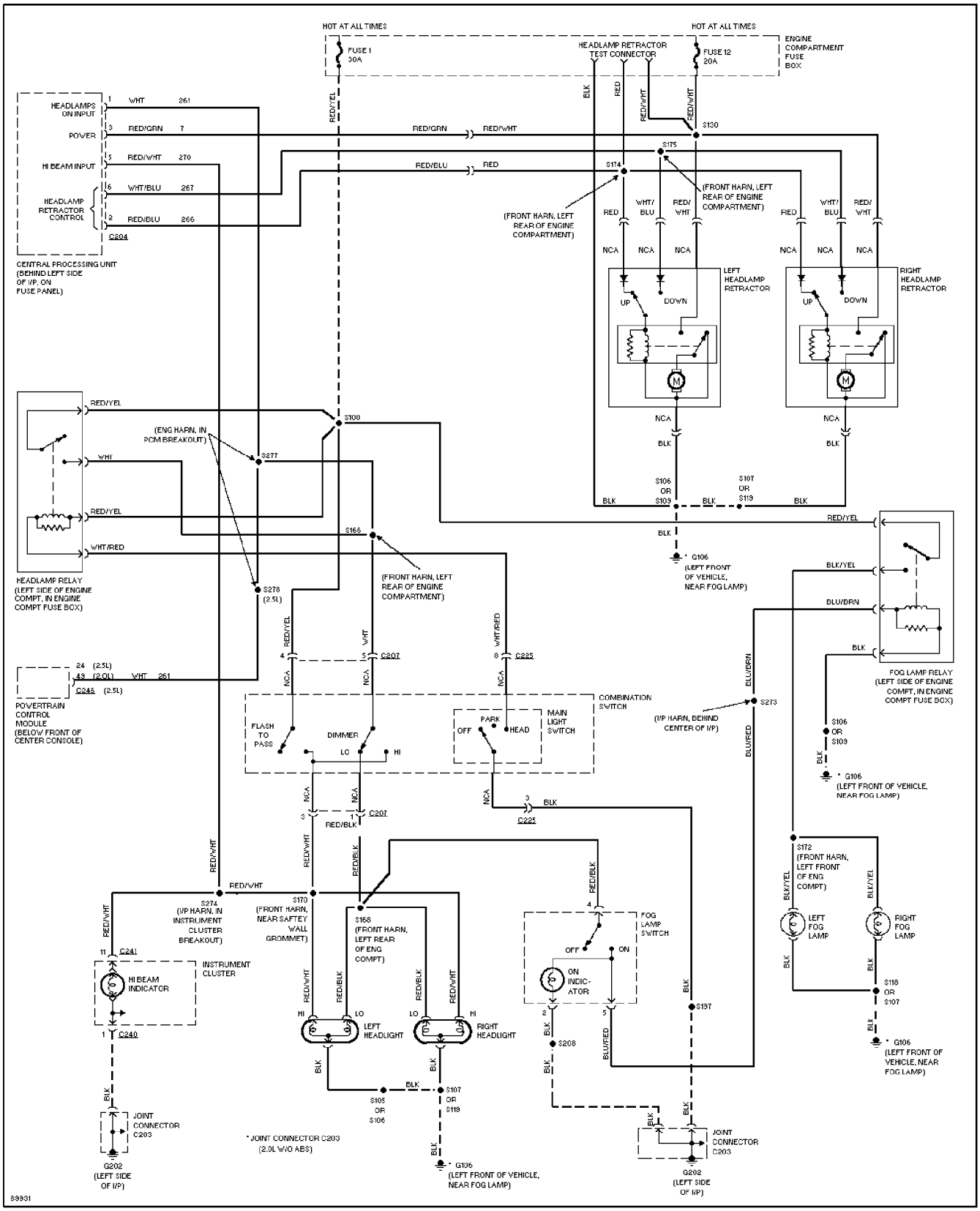
Monday, December 18, 2000 04:48PM